Polarization and frequency entanglement for experiments in bulk and integrated optics

Álvaro Andrés Cuevas Seguel

Physics Department, Sapienza University of Rome,
Piazzale Aldo Moro 5, I-00185 Roma, Italy

January 27, 2016

Outline

Entanglement with Light

- The quantum binary information element is the *Qubit* $|\psi\rangle = \alpha\,|1\rangle + \beta\,|2\rangle$
- Imagine two coupled systems represented by their own qubits.
- *Separable State (SS):* The bipartite Hilbert space can be written as tensor product of both density matrices $\rho = |\psi\rangle\langle\psi|$.
- *Entangled State (ES):* Opposite to the SS, e.g. $\rho_{1,2} \neq \rho_1 \otimes \rho_2$.

- *Polarization Entanglement (PE):* Encodes qubits in the light polarization basis.

$$|\psi\rangle = \alpha\,|H\rangle_1\,|V\rangle_2 + \beta\,|V\rangle_1\,|H\rangle_2 \tag{1}$$

- *Polarization-Frequency Entanglement (PFE):* Like PE, but adding distinguished light wavelengths to each polarization mode.

$$|\psi\rangle = \alpha\,|H\rangle_{\lambda_1}\,|V\rangle_{\lambda_2} + \beta\,|V\rangle_{\lambda_1}\,|H\rangle_{\lambda_2} \tag{2}$$

Spontaneus Parametric Down Conversion (SPDC)

Type-II SPDC

- A pumping photon excites a valence electron of a non-linear crystal.
- When the electron decays two photons emerge, but with new wavelengths.
- The process conserve energy $\omega_p = \omega_s + \omega_i$ and momentum $\mathbf{k}_p = \mathbf{k}_s + \mathbf{k}_i$
- Ordinary polarized pump generates photons with orthogonal polarizations (ordinary and extraordinary).

Quasi-Phase-Matching in Periodic Poled KTP compound

- Periodically alternate non-linear index
- Keeps only the positive phase contributes of the SPDC along the crystal.

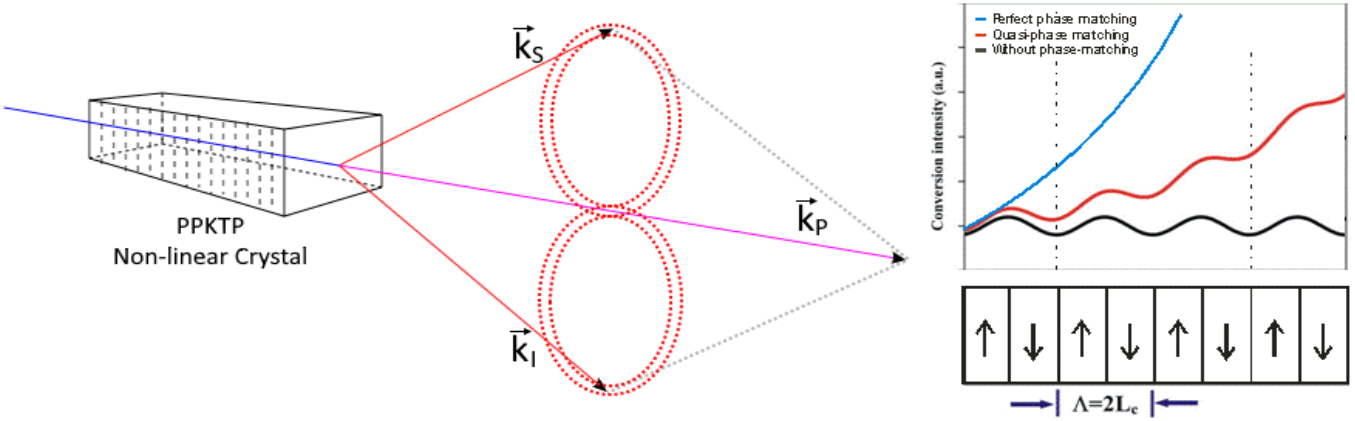

Sagnac Source of Entangled Photons

- Compensates optical paths phase difference between the clockwise and anti-clockwise beams.

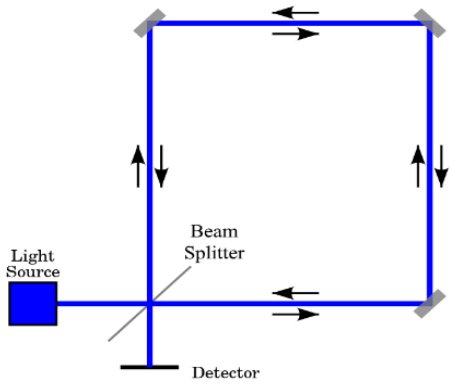

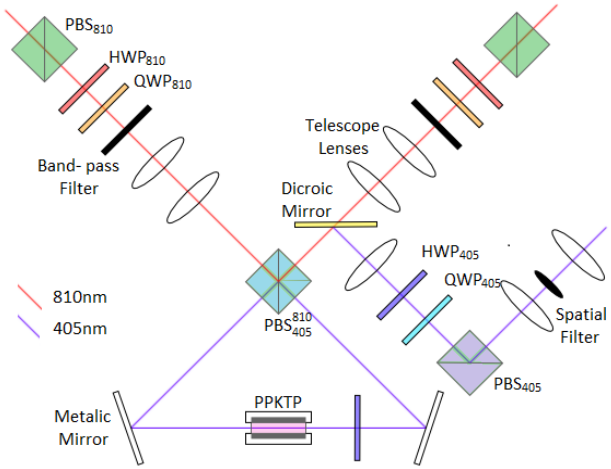

- Pump power-polarization control
- Double SPDC for the generation indistinguishability and entanglement.
- Active oven for the temperature control, and inclination control for the collinearity.
- Tomography stages and customizable focalization.

Improving the entanglement source quality

Changes

- Singlemode laser
- PM optical fiber
- Spatial filter by pinhole
- Erasure of diffraction rings
- Crystal focalization
- Interference filters of $FWHM = \pm 3[nm]$
- Telescope optimization

Pumping at $2,5[mW]$	Concurrence [%]	Fidelity [%]	Single. C. $[\frac{1}{s}]$	Coin. C.$[\frac{1}{s}]$	Spec. Band $[nm]$
Old Source	96,5	95	46900	4600	5
New Source	98	98,5	337500	61500	0,5

Non-Markovian Dynamics

- Sequence of two system-environment interactions
- Loss of original information (entanglement with an ancilla)
- Backflow of information or Non-Markovian (NM) dynamics.
- NM: non positive or completely positive decomposition of a system evolution operator.
- WNM: non completely positive decomposition of a system evolution operator.

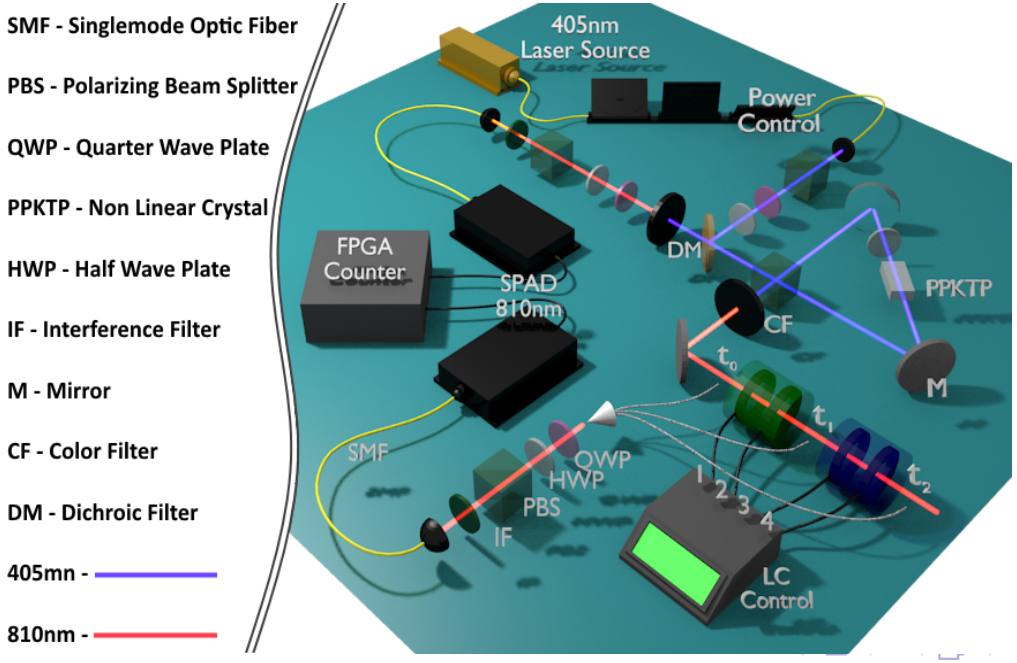

Results

- Identification of a "'Weak Non-Markovianity"' (WNM), unseen by the traditional information backflow techniques.

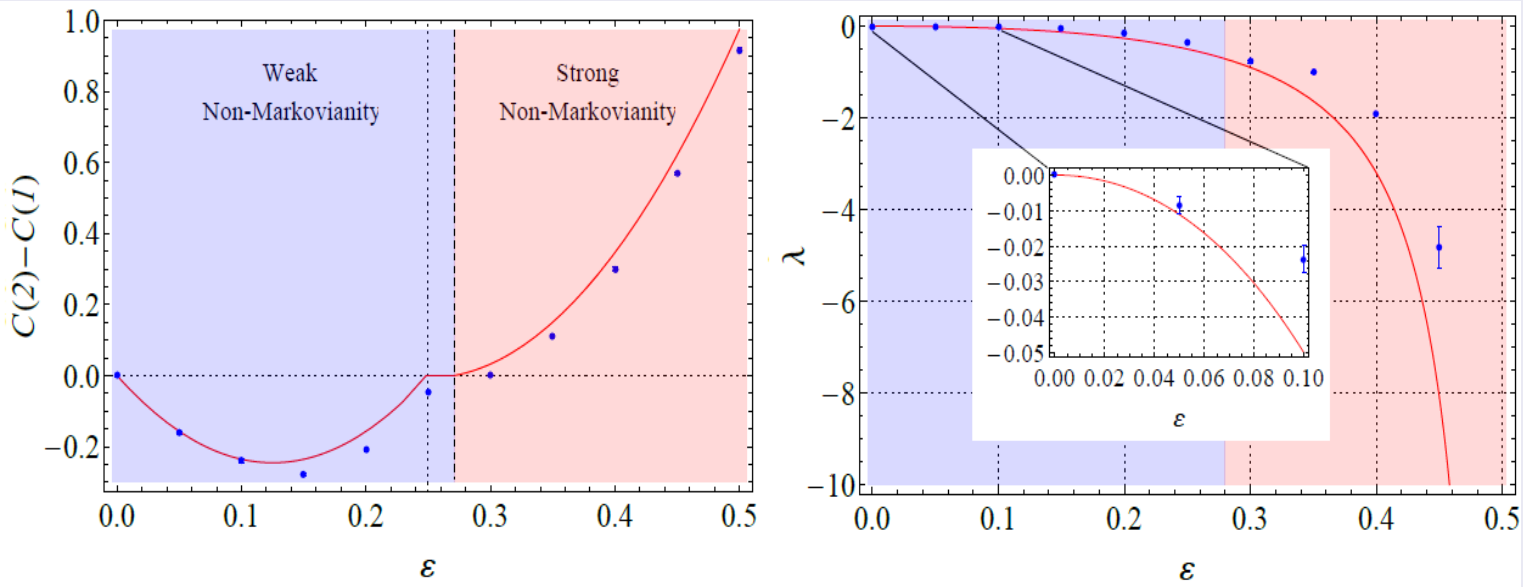

Amending Entanglement Breaking Maps (EBM)

- An EBM^n, applied n-times destroy the entanglement between a sample system and an ancilla.
- Suppose a map $\Psi_s \in EBM^2$ composed by a Half Wave Plate (HWP) after an Amplitude Damping Channel.
- Suppose a map $\Phi_s \in EBM^2$ composed by an ADP after a HWP.
- Then, $\Psi_s \circ \Psi_s(\rho_{s,a})$, $\Phi_s \circ \Phi_s(\rho_{s,a})$ and $\Phi_s \circ \Phi_s \circ \Psi_s \circ \Psi_s(\rho_{s,a})$ destroy entanglement.

Amendable Channel by Filter Map

- $\Psi_s \circ \Theta_s \circ \Psi_s(\rho_{s,a}) \notin EBM^2$
- Where Θ_s is the Filter map composed by two consecutive HWPs.

Amendable Channel by Cut & Paste Map

- $\Phi_s \circ \Psi_s \circ \Phi_s \circ \Psi_s(\rho_{s,a}) \notin EBM^2$

Amplitude Damping Channel (ADC)

$$\begin{aligned} \alpha\,|H\rangle &\longrightarrow \alpha\,|H\rangle \\ \beta\,|V\rangle &\longrightarrow \beta(\sqrt{\eta}\,|V\rangle + \sqrt{1-\eta}\alpha\,|H\rangle) \end{aligned} \tag{3}$$

$$E_1 = \begin{pmatrix} 1 & 0 \\ 0 & \sqrt{\eta} \end{pmatrix} \quad \text{and} \quad E_2 = \begin{pmatrix} 0 & \sqrt{1-\eta} \\ 0 & 0 \end{pmatrix} \tag{4}$$

Filtered Channel Scheme

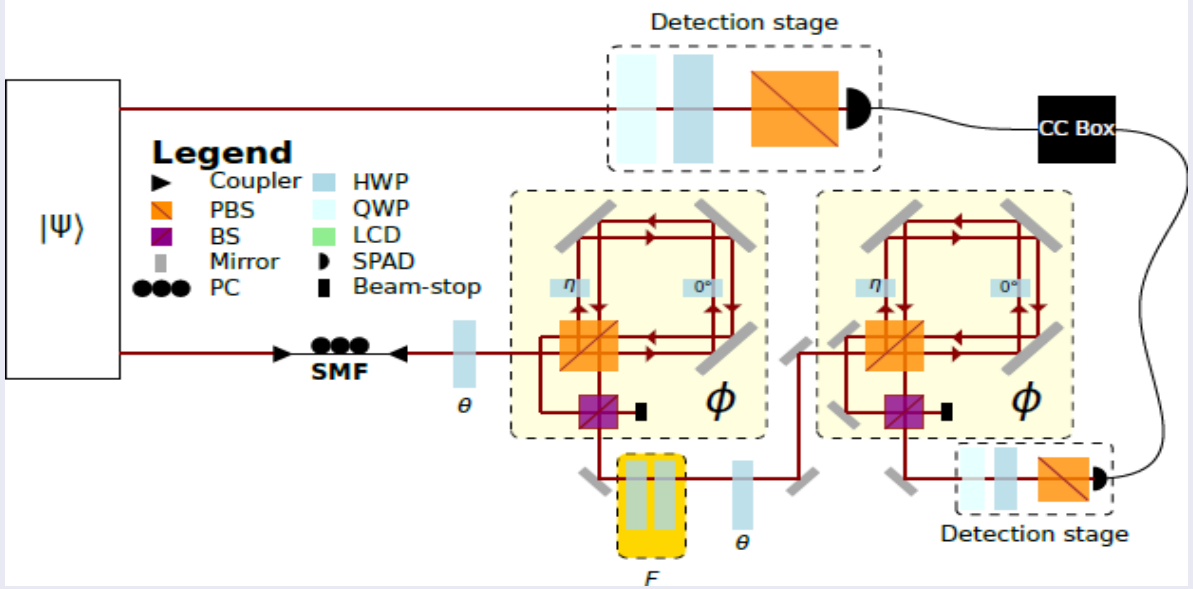

Cut And Paste Channel Scheme

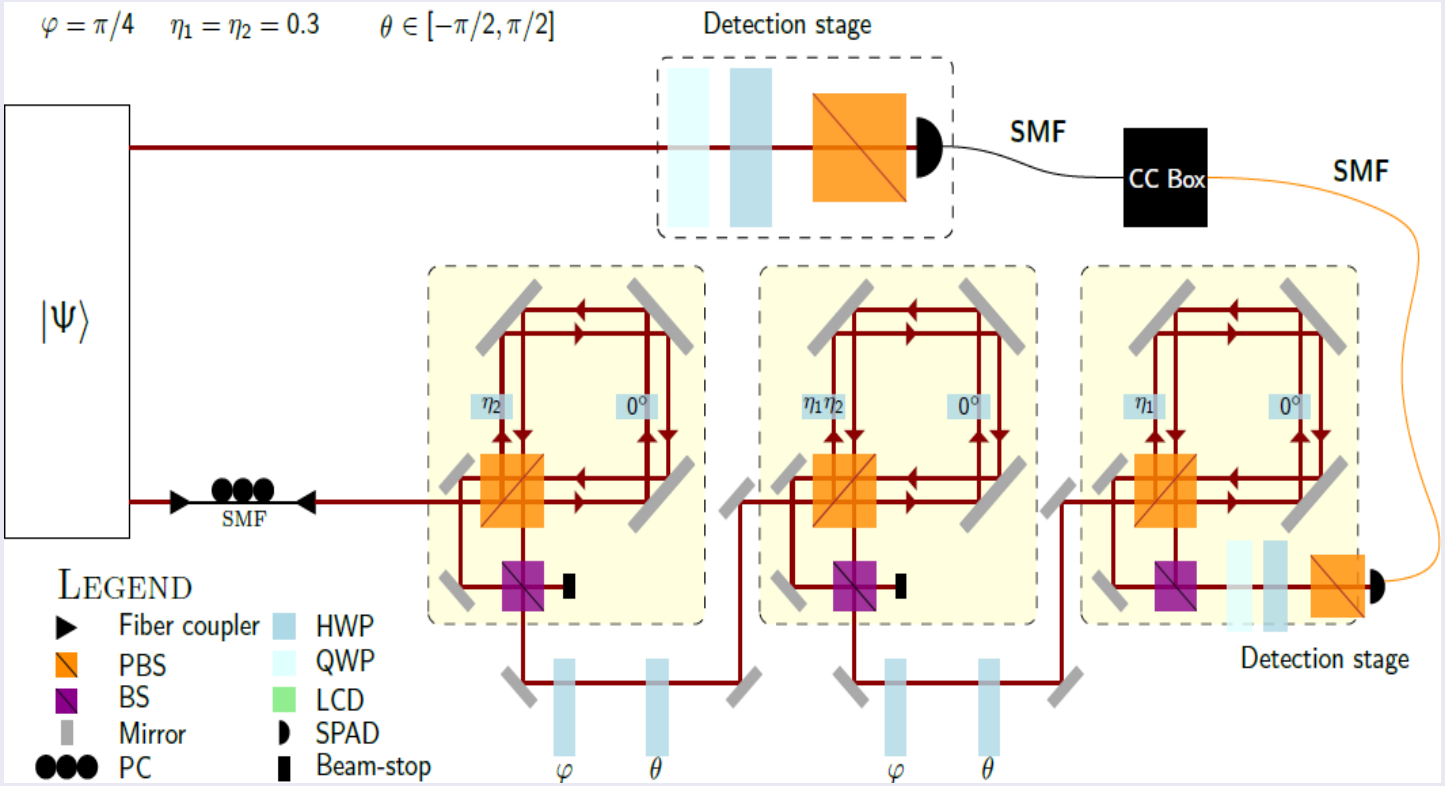

Lower bounds to the Quantum Channel Capacity (Q)

- In noisy quantum communication channels

$$Q > Q_{Detectable} = S\left(\epsilon\left(\frac{I}{d}\right)\right) - H(\vec{p}) \tag{5}$$

- $S(\rho) = -Tr[\rho log_2(\rho)]$ is the *Von Neumann Entropy*
- $H(x) = -xlog_2(x) - (1-x)log_2(1-x)$ is the *Shannon Entropy*
- $\epsilon(\rho) = \sum_j A_j \rho A_j^\dagger$ is the noisy channel operator.

- H must be minimized by some optimized parameters,
- One has to measure $\sigma_x^s \otimes \sigma_x^a$, $\sigma_y^s \otimes \sigma_y^a$ and $\sigma_z^s \otimes \sigma_z^a$
- A considerable reduction in the number of measurements compared with a tomography.

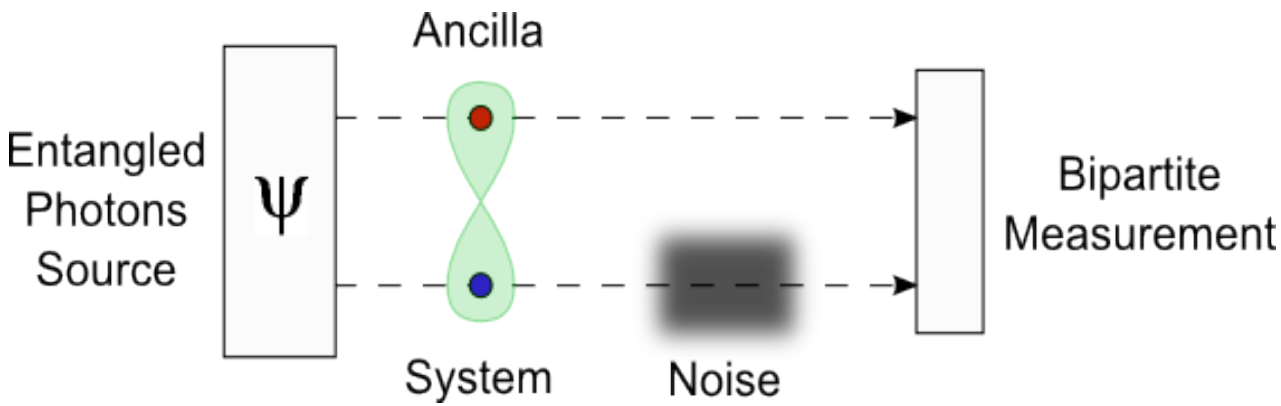

Super-diffusion of Photons in randomly diluted Quantum Walks (QW)

- In a network of *Mach-Zehnder* (MZ) interferometers, where each step is considered as an integrated QW, transmitted input photons choose sequentially which output to take.
- The length differences between MZ's arms is equivalent to a phase difference.
- Ordered QW: For any step the MZ's phase differences are zero, transporting geometrically diffused light.
- Static Disordered QW: For any step the phases present a statistical static disorder, transporting non diffusive light.
- Anderson Localization
- Evolving Disordered QW: New effect of super-diffusion.

Known Diffusion or Anderson Localization for Single Photons

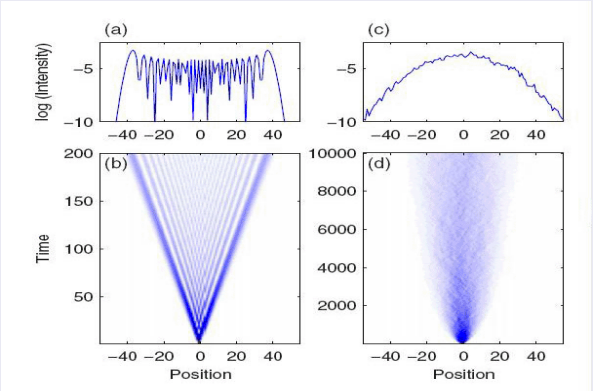

Known Diffusion or Anderson Localization for Entangled Photons

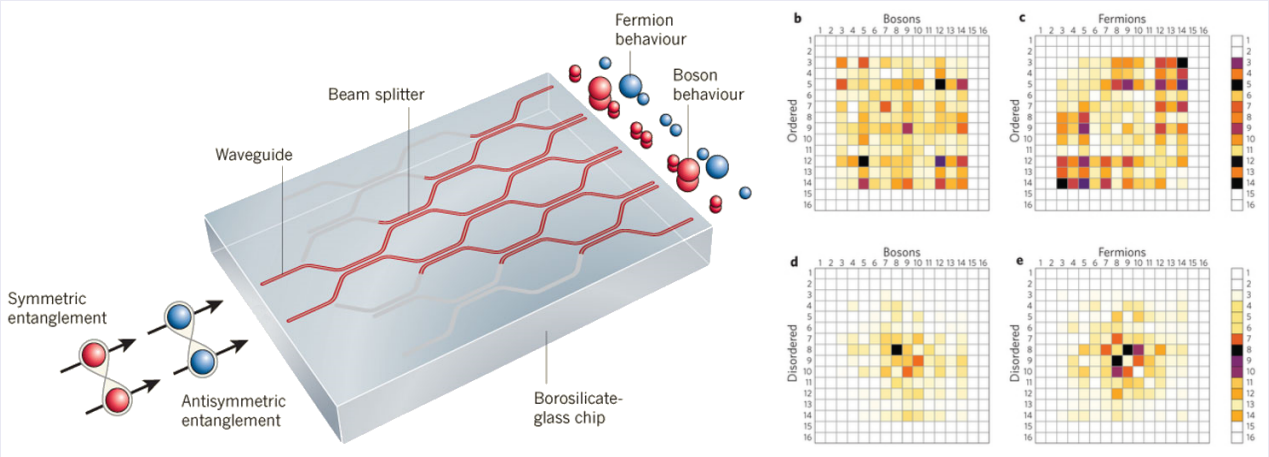

Generalized Trace Distance Criterion

- A quantum process Φ is defined to be Markovian if the *Trace Distance* (TD) between two biased mapped states

$$||p_1\Phi_t(\rho_1) - p_2\Phi_t(\rho_2)||_1 = Tr|p_1\Phi_t(\rho_1) - p_2\Phi_t(\rho_2)| \tag{6}$$

  decrease with $t \geq 0$.
- We define $I_{int} = ||p_1\Phi_S^1(t) - p_2\Phi_S^2(t)||_1$ and $I_{ext} = ||p_1\Phi_S^1(t) - p_2\Phi_S^2(t)||_1$ correlated by the information relation $I_{int}(t) + I_{ext}(t) = I_{int}(0) = cons$
- Quantifying the degree of memory effects by continuity in t we get a new TD

$$N(\Phi) = max_{\{}p_i\}, \rho_2 \in \partial U(\rho_1) \int_{\sigma>0} dt\sigma(t, p_i\rho_i) \tag{7}$$

- Where $\sigma(t, p_i, \rho_i) \equiv \frac{1}{||p_1\rho_1 - p_2\rho_2||_1} \frac{1}{dt} ||p_1\Phi_t(\rho_1) - p_2\Phi_t(\rho_2)||_1$.

- P-divisibility is no more enough to prove Markovianity, we need to use also CP-divisibility.
- The idea of the work is to measure the generalized trace distance of two states before and after some map.
- If the TD weights are $p_1 = p_2$ we are not abble to detect non-Markovianity.
- It the TD weights are $p_1 \neq p_2$ (under some restrictions) we are able to detect non-Markovianity.
- Confirmation of a local and universal representation of the measure of Markovianity.

Thank you for your attention!!!